Data Sheet

Article number: 23102081113
Description: E+G Handwheel
EYK.275+I A-20-C3

Measures

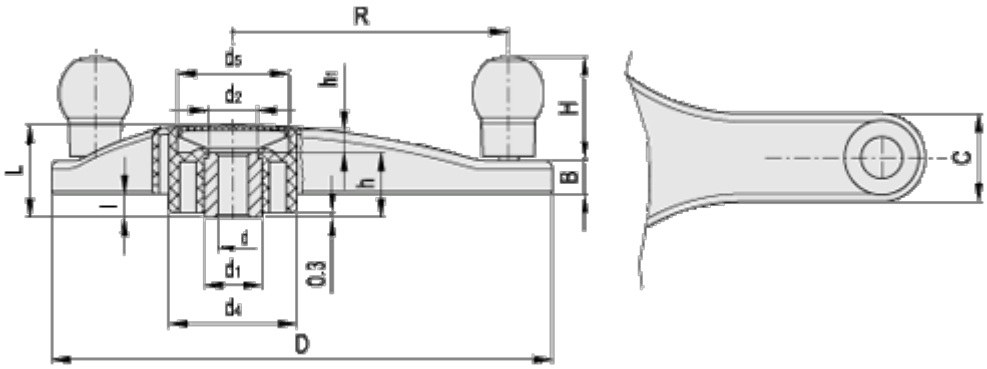

B	= 21	H	= 65
C	= 50	h	= 38
D	= 275	h1	= 14
d1	= 35	l	= 19.5
d2	= 33	L	= 54
d4	= 76	R	= 112.5
d5	= 70		
d h7	= 20		

Product drawings and brochures of any kind may contain errors for which Brd. Klee A/S cannot be liable.